List: RV22-2A-1-May 2016

DESCRIPTION

A screw-in , cartridge-style , direct-acting , poppet-type , hydraulic relief valve intended for medium flow circuits requiring low internal leakage.

OPERATION

The RV22-2A blocks flow from 1 to 2 until sufficient pressure is present at 1 to force the spring-opposed poppet from its seat.

SYMBOL

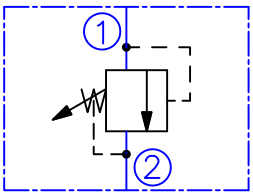

PERFORMANCE

Cartridge only
32cSt oil at 40°C

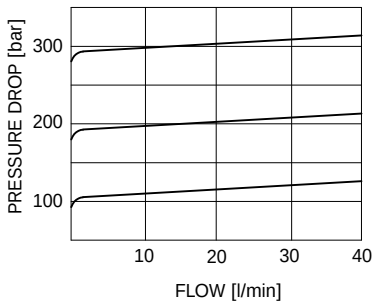

The Performance Chart illustrates flow handling capacity at max. setting for each spring range option. Pressure rise will vary with spring (range) and with setting within range due to flow forces.

DIMENSIONS

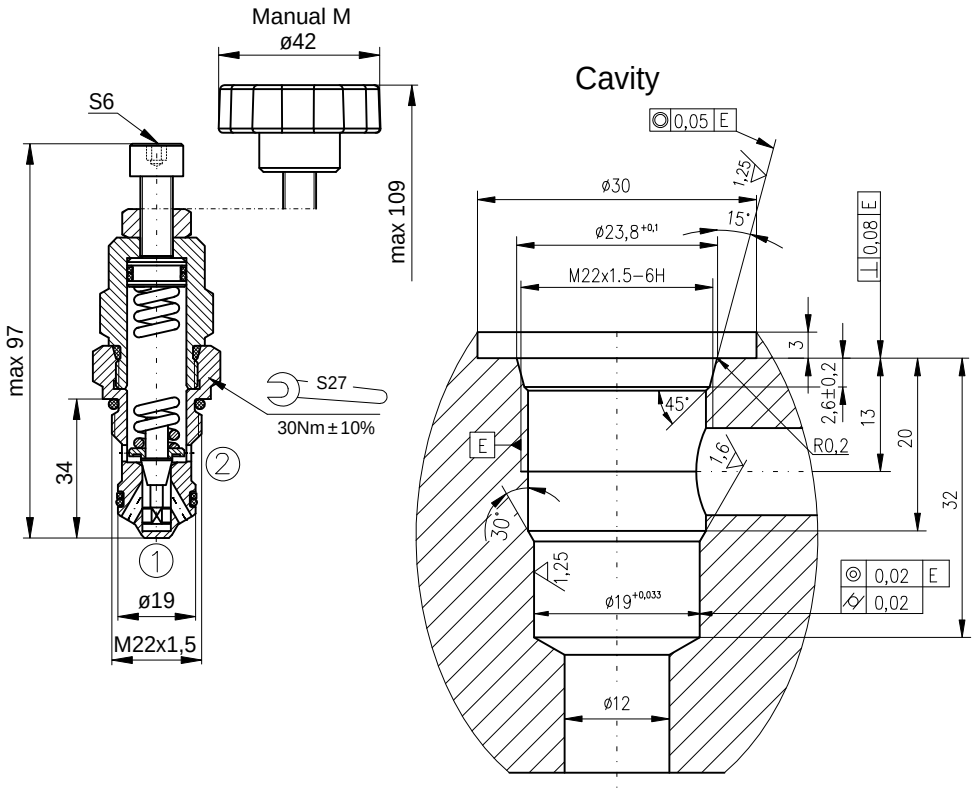

ORDERING CODE

RV22-2A	...	...	...

Relief valve

Pressure adjustment range:
8...100bar - 100
15...300bar - 300

Seals:
Buna - N
Viton - V

Adjustment:
omit - hexagon screw
M - manual

TECHNICAL DATA

Max. operating pressure		315bar
Pressure adjustment range:	RV22-2A100...	8...100 bar
	RV22-2A300...	15...300 bar
Rated flow - See Performance Chart		
Working liquid-hydraulic oils with characteristics:		
-viscosity		10...400 cSt
-degree of filtration		0,025 mm
-temperature		-20...+80°C